NEW MODEL 2015

# GORANO LED / Eco Line / Model:GL-1XCHM.M / 2 Years Full Warranty

Innovative LED lighting

GORANO

New generation LED floodlights GORANO, made in Bulgaria - Europe/EU, distinguished with high quality, proven reliability and innovative design. Suitable for outside lighting on industrial areas, parkings, streets, parks, gardens, facades, buildings, billboards, sports facilities, ski pistes, lifts, golf fields, logistic centers, historical complexes, security lighting etc. …

## PRODUCT DESCRIPTION

LED floodlight intended for outdoor installation
Light source - LED COB LUMINUS
Power supply - MEAN WELL; LPC Series-certificate: UL, EMC
Hight-tech optical system OXILED
UV protected polycarbonate group GO/SLX
Highly efficient faceted reflector LEDIL
Light distribution - Direct
Even distribution of luminous flux
Low coefficient of dazzle
Thermal management - Passive
Materials body anodised aluminum, details - INOX, polycarbonate
U-shaped bracket for up to 90° tilting, fixation with standard bolts and nuts
Connection - cable with 2 wires, box or a connector with minimum IP65

## SPECIFICATION

Starting power - 30 W; Operating power - 29.4 W
Voltage - 100 - 240 VAC, 1.1 A; 50/60 Hz
Non dimming
Protection class - II ; ⧈
Power factor / Cos (φ) 0.68
Coefficient of oscillation - 0.8%
Effective luminos flux LED floodlight - 2598 lm
LED system efficacy - 88.4 lm/W
Color temperature - 5000 K
Color Rendering index CRI = 80 Ra
illumination angle - 35°
Operating life of the light source LED min. 50000 h
Operating temperature range -30°C to +40°C
IP Protection degree - IP65
Mechanical impact resistance - IK10
Dimensions body - lenght 206 mm
- width 90 mm
- height 120 mm
Total weight - 2.080 Kg

NEW Model:GL-1XCHM.M

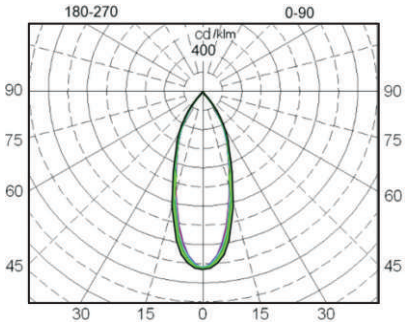


Luminaire light distribution of polar coordinates in the conditional flux 1000lm

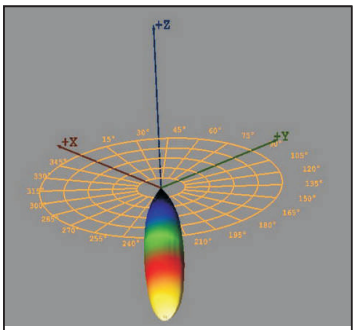


Luminaire light distribution of the 3D

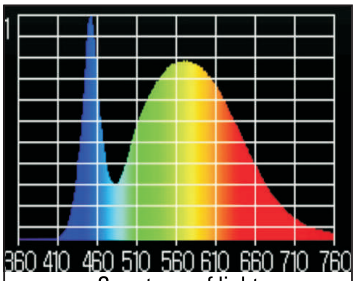


Spectrum of light

LED CE 30W IP-65 35° 2.1Kg F RoHS compliant EU

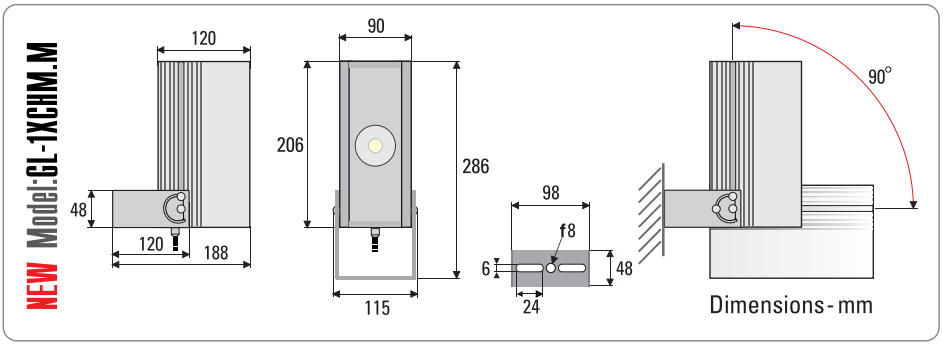


The GORAN-PIC Ltd. reserve the right to change any product specifications without prior notification.
The trade mark GORANO and the industrial design of the LED floodlights are property of GORAN-PIC Ltd.